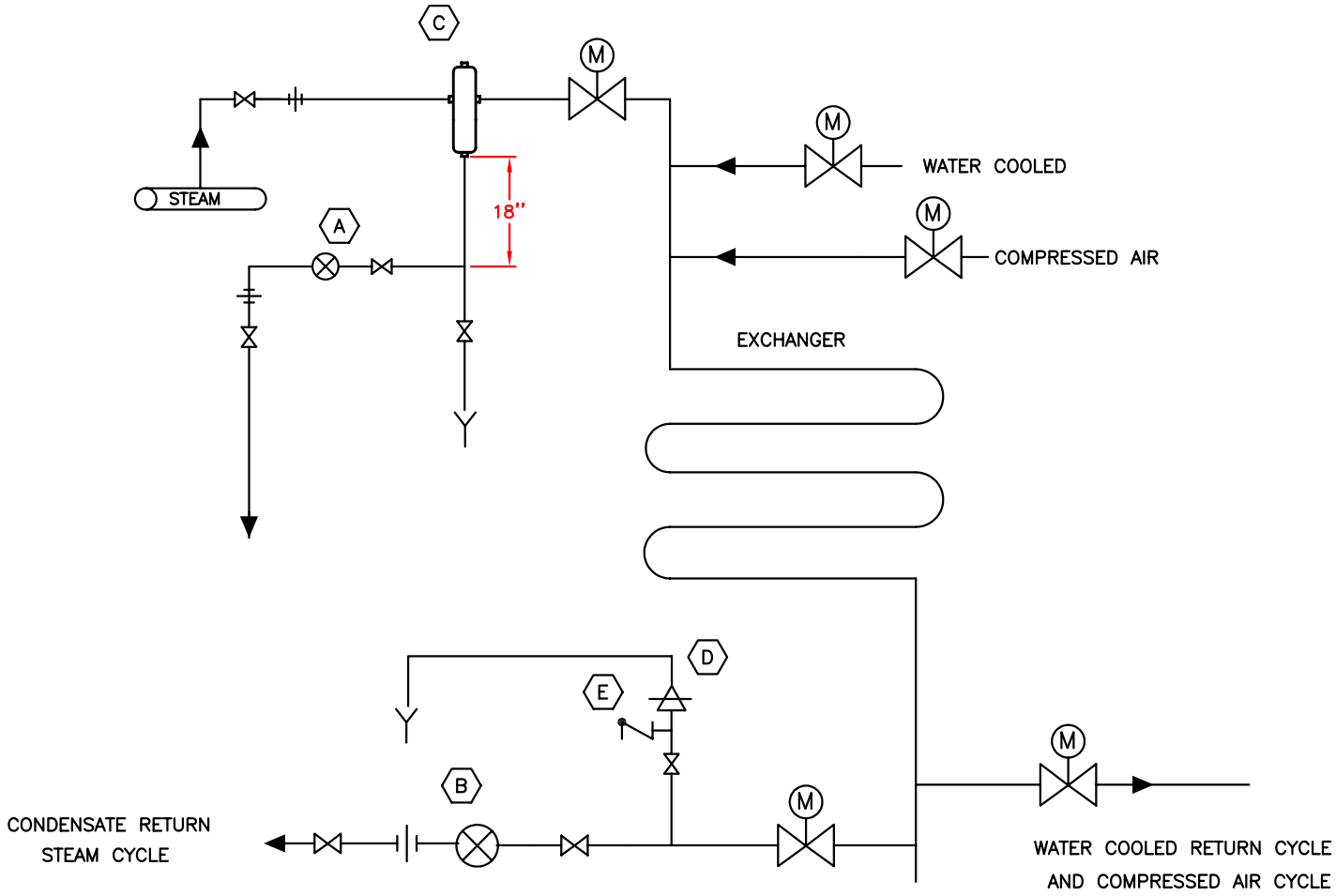

ITEMS

A	STEAM TRAP WITH STRAINER
B	MAIN STEAM TRAP
C	SEPARATOR
D	AUTOMATIC AIR VENT
E	VACUUM BREAKER

NOTE:
1. SAME DIAMETER AS THE OUTLET OF THE EQUIPMENT
2. SAME DIAMETER AS THE OUTLET OF THE EQUIPMENT AND NON INSULATED

CUSTOMER:

PROJECT:

TITLE: PROCESS: STEAM CYCLE, WATER COOLED,COMPRESSED AIR

DWG.NO.: M.T.–23–A

REV.NO.:

DATE: 13–12–2004

MAXI THERM

maxi-therm.net